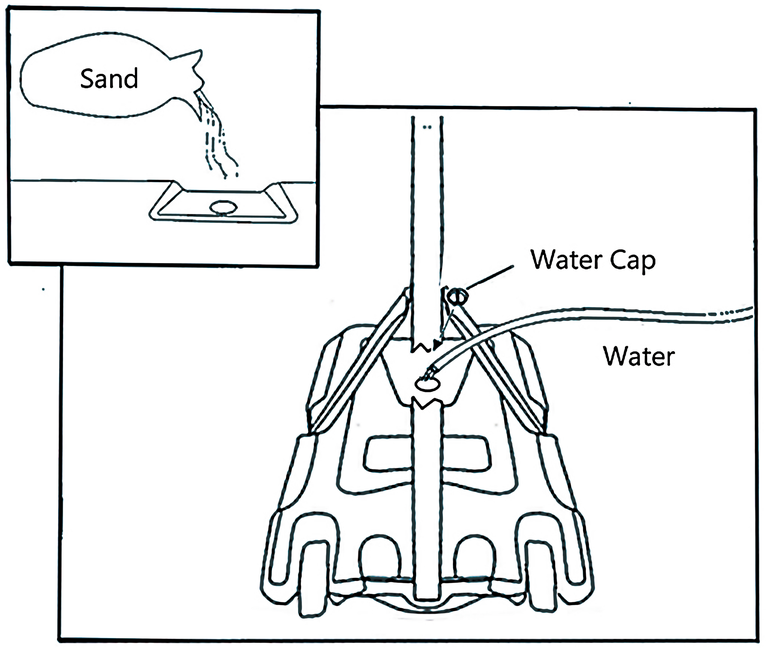

Filling the Base(S) with water or sand to keep steady.

PEGASI

BASKETBALL SYSTEM-OWNERS MANUAL

WARNING:
IMPROPER INSTALLATION OR SWINGING ON THE RING MAY CAUSE SERIOUS INJURY OR DEATH

Notice to assemblers:

All the basketball systems, including those used for displays must be assembled and ballasted according to instructions. Failure to follow instructions could result in serious injury.
Please read all warnings and cautions before assembly. It is recommended to supervise children as they play with this product. This product is to be assembled by 2 adults only!

We appreciate your purchasing one of our many fine products. We are assured that you will be very satisfied with your selection.

PART LIST

Part No.	Name & Specification	Qty	Remarks
A	Plastic head knob	1	Fix Top Pole(W) On Middle Pole(X)
B1、B2、B3	Bolt，M8 × 35 MM	4	Connect Rim(I),backboard(K) & Top Pole(W)
C1、C2、C3	Bolt，M8 × 20 MM	2	Connect Base(S) & Base Brace (L1),(L2)
D1、D2、D3	Bolt，M8 × 60 MM	2	Connect Middle Pole (X) & Bottom Pole(Y),And connect Top pole(W) &Middle Pole (X)
E1、E2、E3	Bolt，M8 × 65 MM	1	Connect Bottom Pole(Y) & Base Brace(L1),(L2)
G	Wheel	2	
H	Water Cap	1	
I	Rim	1	
J	Net	1	
K	Backboard	1	
L1	Right Brace	1	
L2	Left Brace	1	
M	Wheel Shaft		
N	Pole Cap	1	
W	Top Pole	1	
X	Middle Pole	1	
Y	Bottom Pole	1	
S	Base	1	

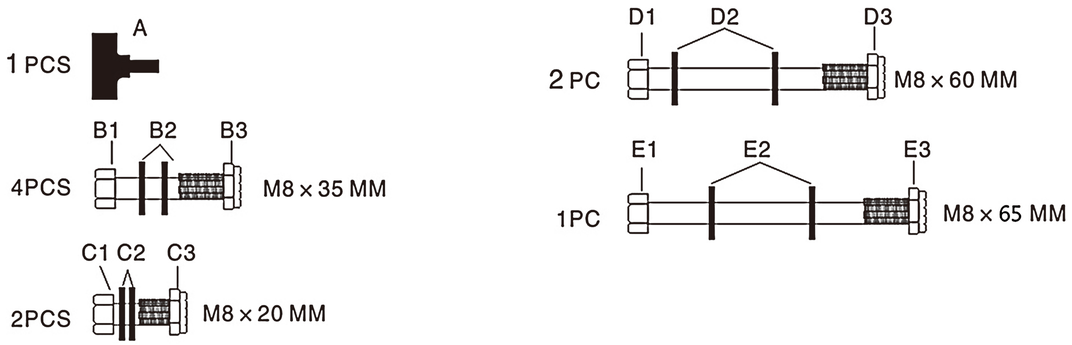

Install Net (J) on Rim (I) as shown.

1.

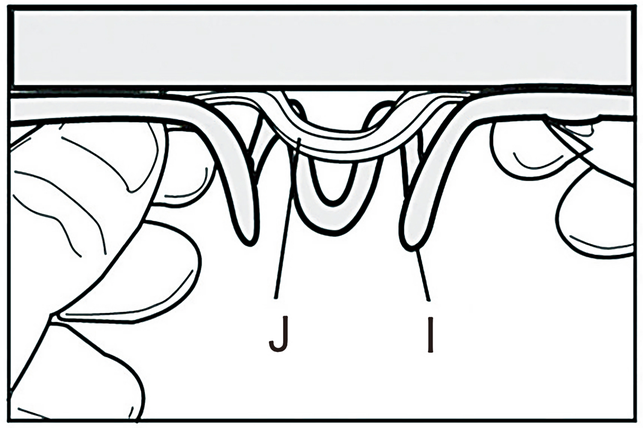

2.

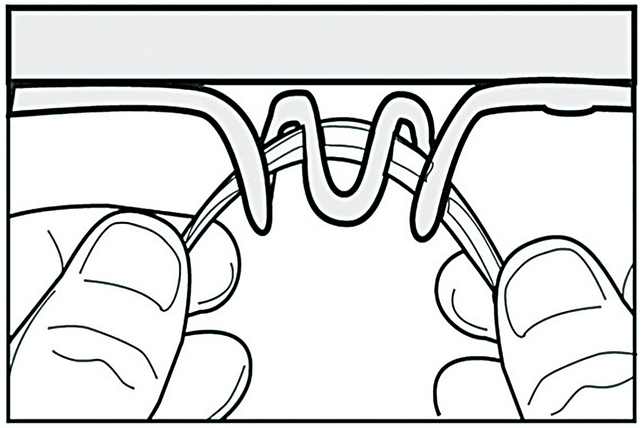

Install Rim(I) & Top Pole(W) on Backboard(K) by Bolt Set (B1),(B2)&(B3) as shown.

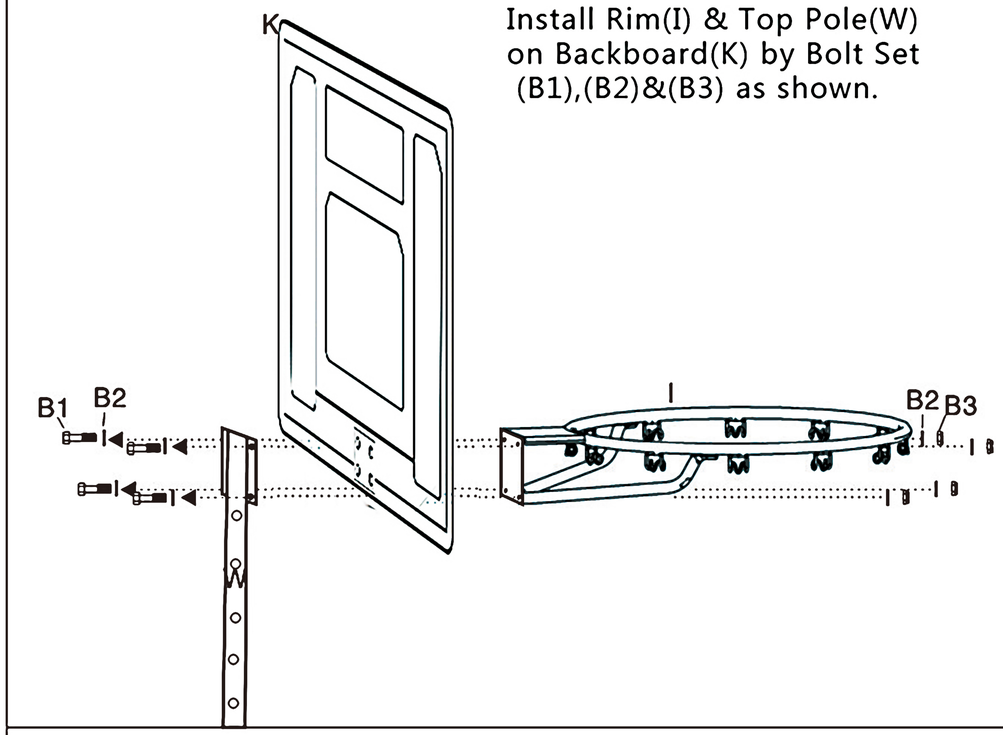

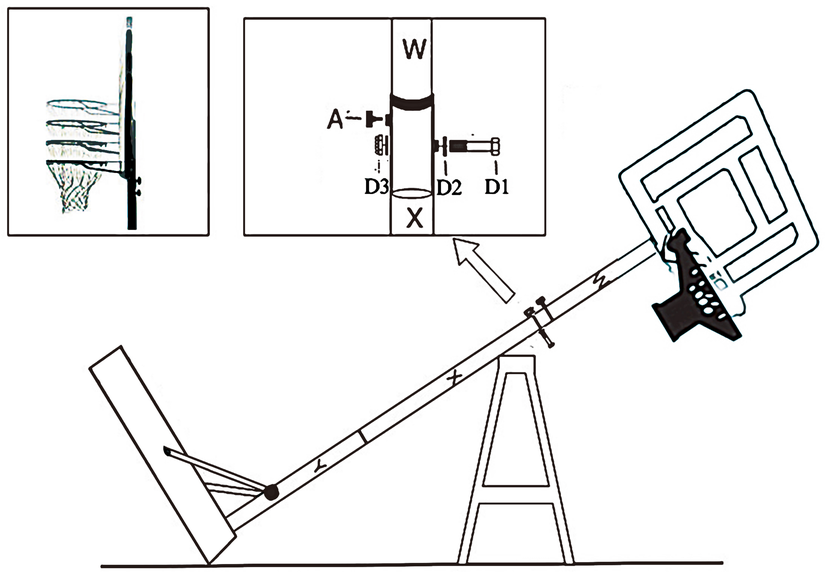

Insert the Top Pole(W) into Middle Pole (X),adjust it to required height,then fix them by Palstic Head Knob(A)&Bolt Set (D1),(D2)&(D3) as shown.Adjust the height by change the Bolt Set (D1),(D2)&(D3) in different holes on Top Pole(W).

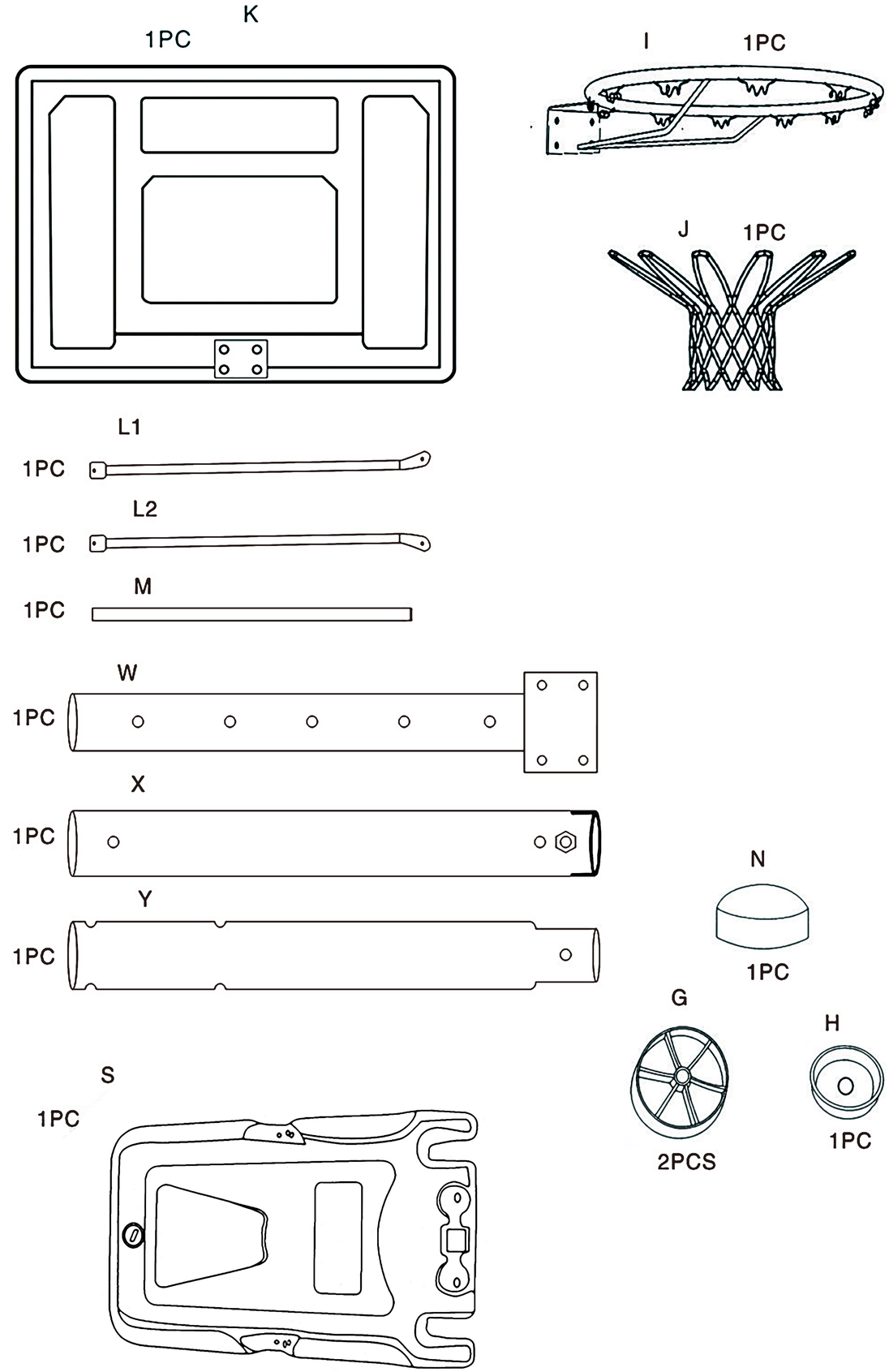

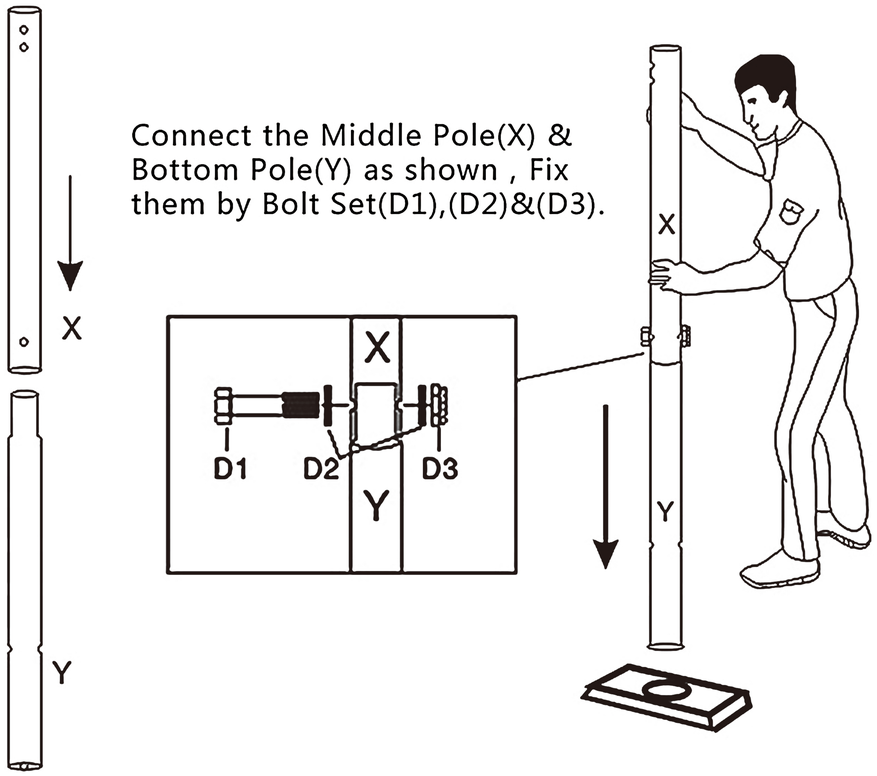

Connect the Middle Pole(X) & Bottom Pole(Y) as shown , Fix them by Bolt Set(D1),(D2)&(D3).

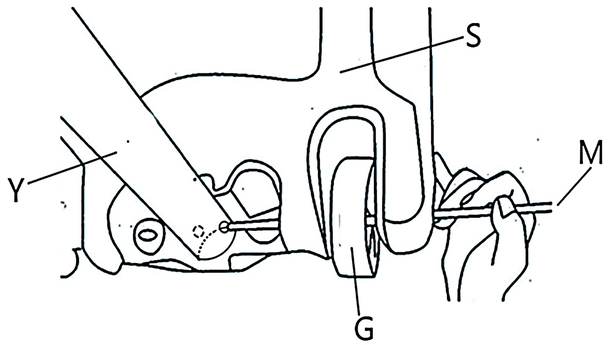

Insert the Wheel Shaft (M) into Wheel(G),Base(S) and end of Bottom Pole (Y) as shown.

As Shown

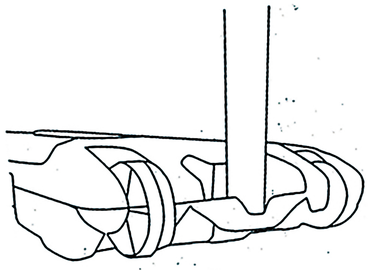

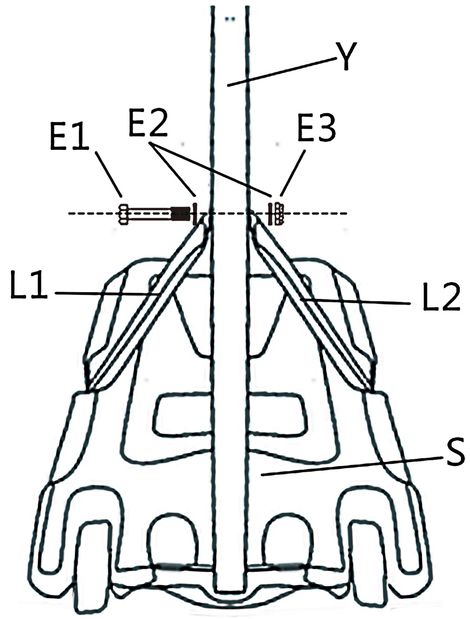

Fix one end of Pole Brace(L1)&(L2) on Bottom Pole(Y) by Bolt Set (E1),(E2)&(E3) as shown.

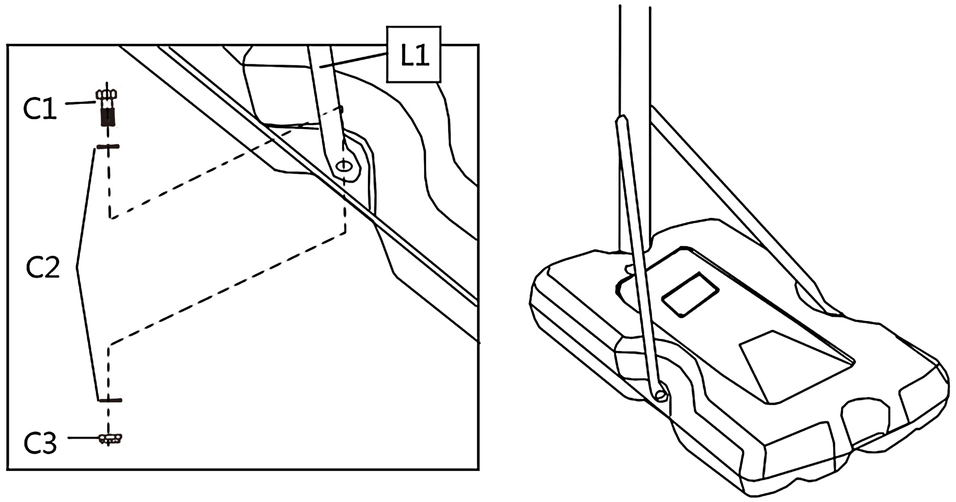

Fix the other end of Pole Brace(L1)&(L2) on two sides of Base(S) by Bolt Set (C1), (C2)&(C3) as shown.